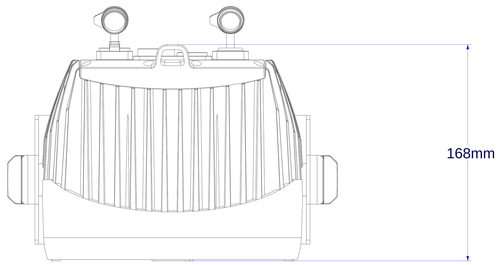


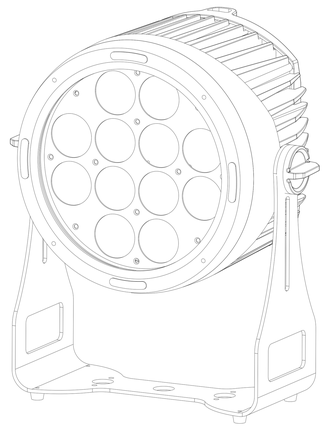

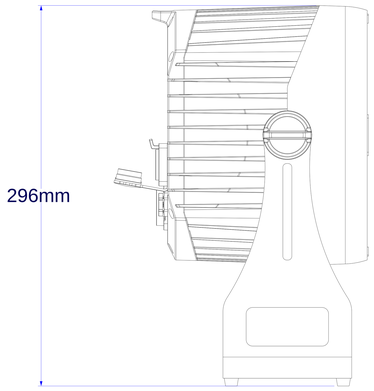


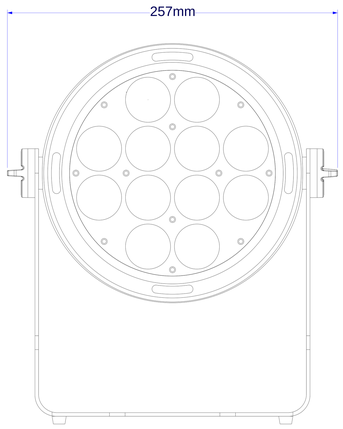


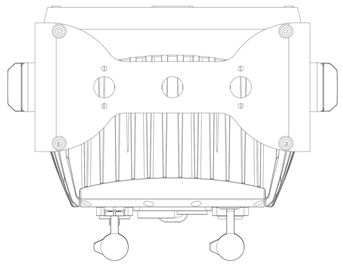

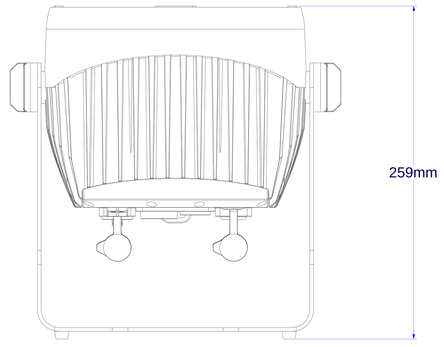


PLUSlite

EASY-PL1215