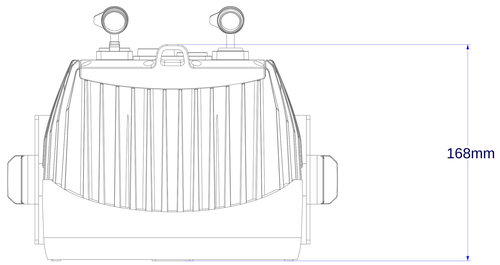

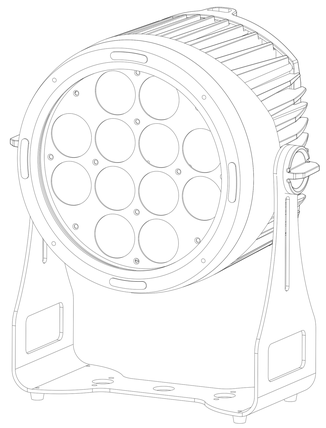

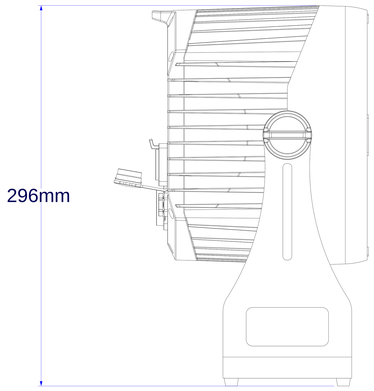

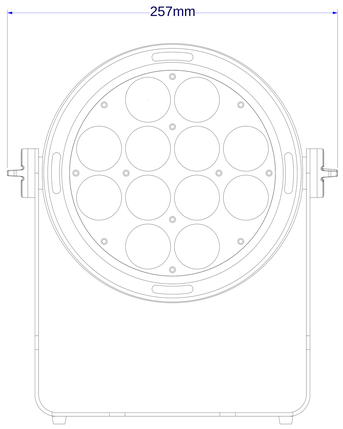

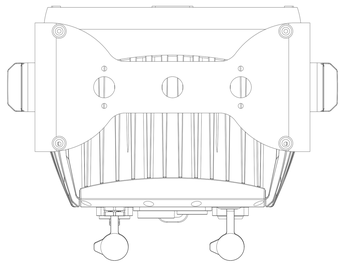

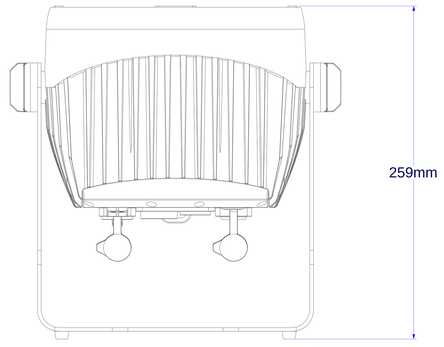

PLUSlite

EASYBAT-PL1215B