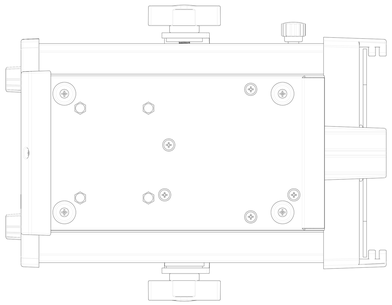

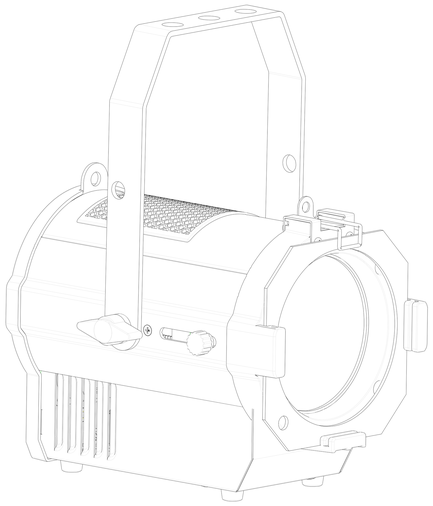

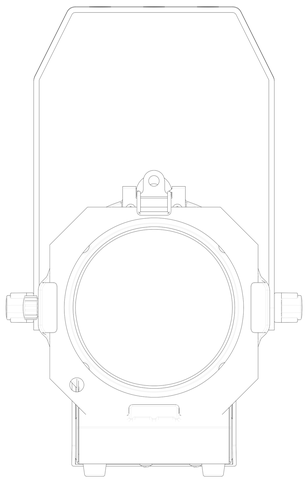

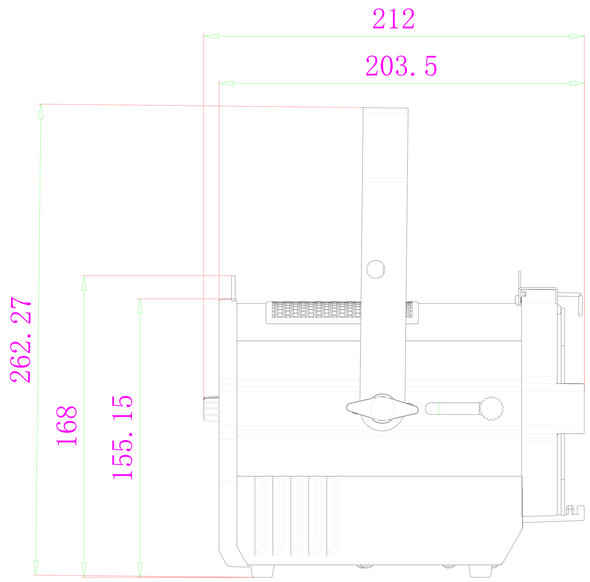

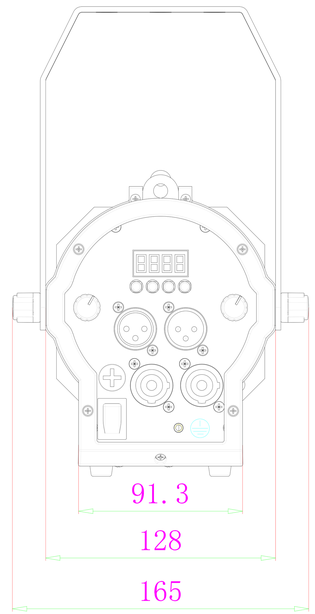

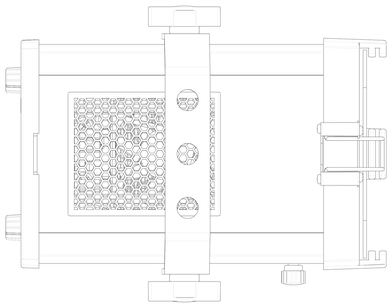

PLUSlite

FRESLED Compact - PL100TZC