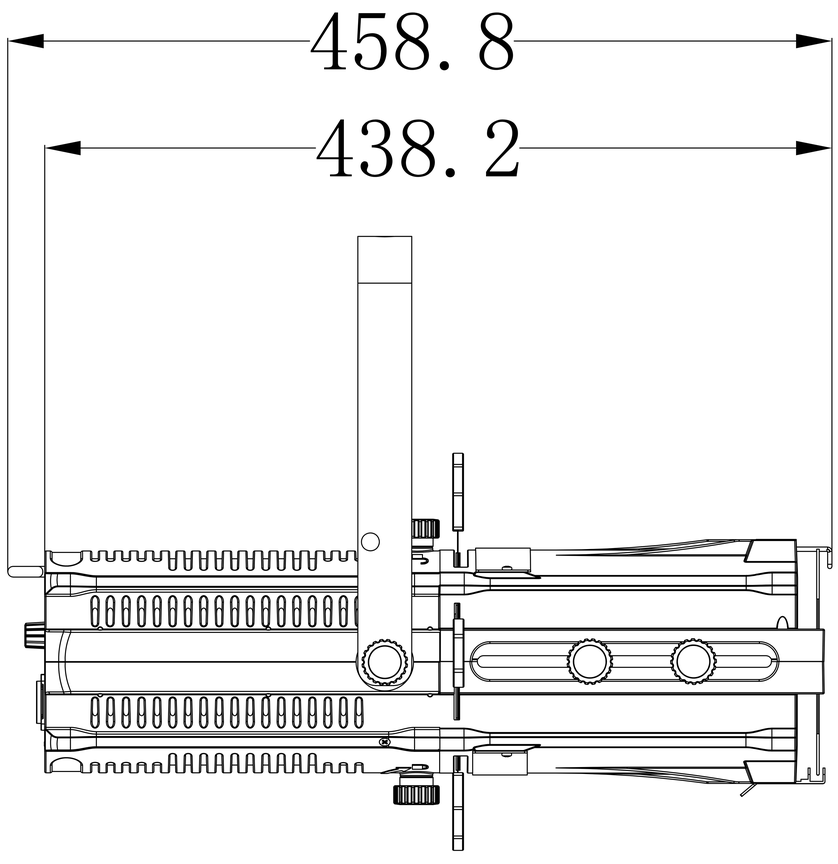

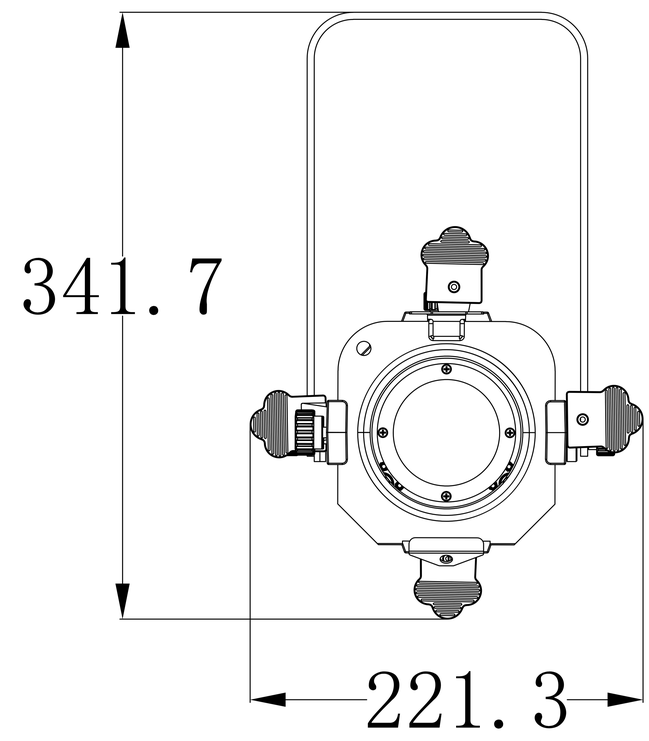

PLUSlite

SAGOMA Colors - PL100PZC