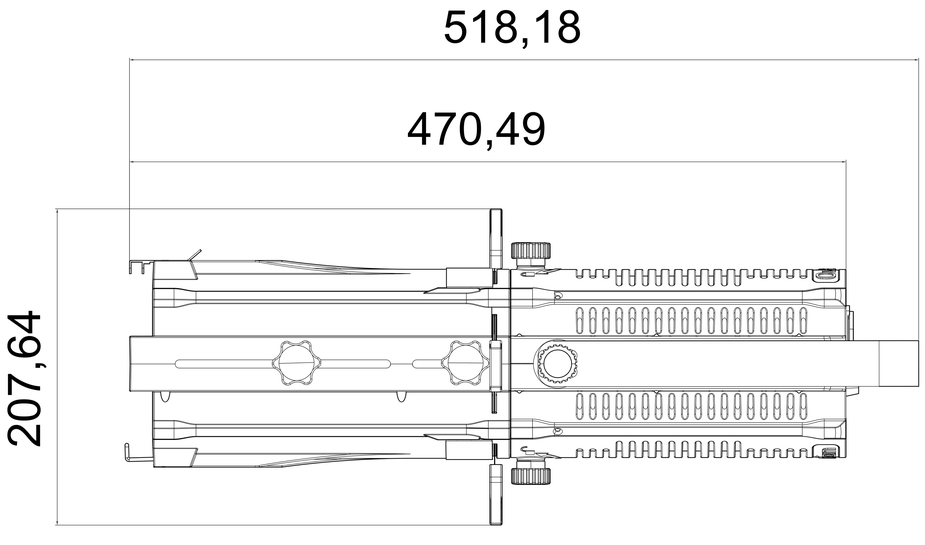


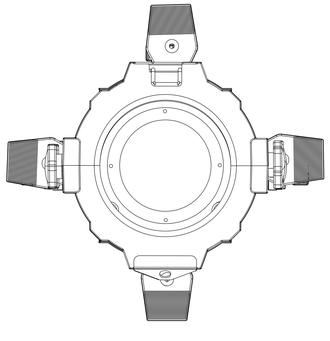

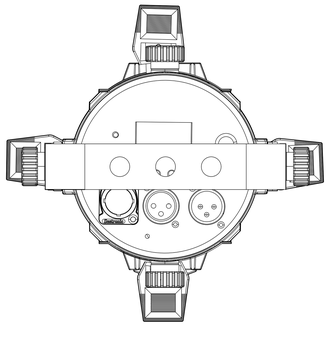

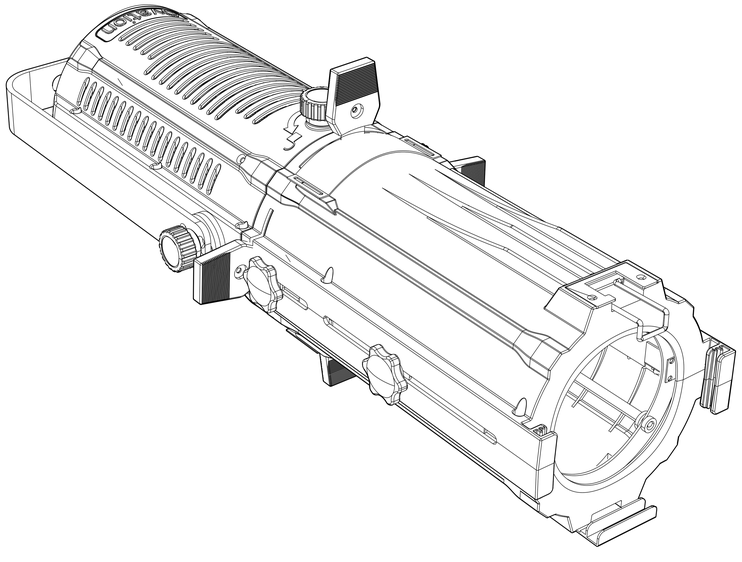

PLUSlite

**SAGOMA Tunable - PL100PZT**